MAYSER®

Innovative by tradition.

Obstacle detection for buses & trains

EN | Data sheet

7500509	EKS 002 TPE
7501755	EKS 026 TPE
7501869	EKS 030 TPE
7500674	SE 1 15 TPE
7500270	SE 1 18 TPE

Mayser GmbH & Co. KG
Örlinger Strasse 1–3
89073 Ulm
GERMANY
Tel.: +49 731 2061-0
Fax: +49 731 2061-222
E-mail: info.ulm@mayser.com
Website: www.mayser.com

MAYSER®

Table of contents

Overview of combinations 2
Sensors 3
7500509 EKS 002 TPE 3
7501755 EKS 026 TPE 4
7501869 EKS 030 TPE 5
7500674 SE 1 15 TPE 6
7500270 SE 1 18 TPE 7
Physical resistance 8
Chemical resistance 9
Compatibility of materials 9
Cables 10
1004681 Single-core wire 1× 0.35 mm² 10
1004733 Multi-core cable 2× 0.22 mm² 11
1004821 Multi-core cable 2× 0.35 mm² EPDM 12
1005052 Multi-core cable 2× 0.35 mm² TPV 13
1005437 Multi-core cable 2× 0.35 mm² TPV 14
1006491 Mayser RoadFR® 2× 0.35 mm² 15
1007144 Mayser RoadFR® 2× 0.22 mm² 16
Drag chain cables 17
1003288 Chainflex CF900 2× 0.25 mm² 17
1005975 Mayser RailFR® 2× 0.25 mm² 18
1006180 Mayser RoadFR® 2× 0.25 mm² 19

Overview of combinations

	EKS … TPE			SE … TPE	
Cables	002	026	030	1 15	1 18
1004681		●			
1004733	●		●	●	●
1004821	○		○	○	○
1005052	○		○	○	○
1005437		○			
1006491	○		○	○	○
1007144	○		○	○	○
1003288	○		○	○	○
1005975	○		○	○	○
1006180	○		○	○	○

● = standard ○ = optional

Sensors

7500509 EKS 002 TPE

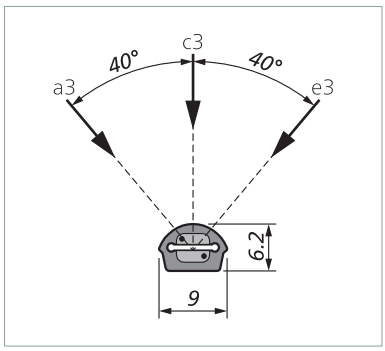

Dimensional tolerances according to ISO 3302 E2/L2

Bend radii:

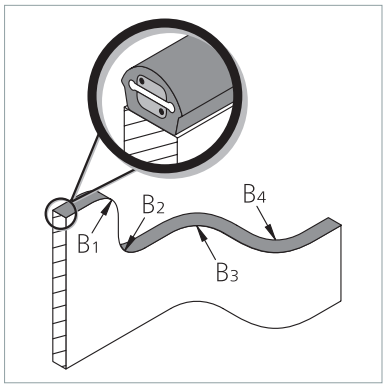

Switching characteristics at v_{test} = 50 mm/min			
Actuation force (c3)	**+23 °C**	**–25 °C**	**–40 °C**
Test piece (rod) Ø 20 mm	< 15 N	< 20 N	< 30 N
Test piece (cylinder) Ø 80 mm	< 60 N	< 100 N	< 130 N
Test specimen length *	1 m		
Actuation distance (c3)			
Test piece (cylinder) Ø 80 mm	< 1.5 mm		
Actuation angle (a3 to e3)			
Test piece (cylinder) Ø 80 mm	±40°		
Safety classifications			
ISO 13849-1: B_{10D}	2×10^6		
Mechanical operating conditions			
Sensor length (min./max.)	100 mm / 150 m		
Cable length (min./max.)	200 mm / 100 m		
Tensile load, cable (max.)	60 N		
Bend radii, minimum			
B_1 / B_2 / B_3 / B_4	50 / 80 / 120 / 120 mm		
IEC 60529: degree of protection	IP67		
EN 50125-1:			
Air temperature class	TX		
Class of altitude range	AX, max. 2000 m NHN		
Max. humidity at	100%		
Max. temperature change	3 K/s		
Operating temperature	–40 to +80 °C		
Short-term (max. 10 min)	–40 to +100 °C		
Weight (without cable)	43 g/m		
Electrical operating conditions			
When sensor is not actuated			
Terminal resistance (±1%)	1k2, 8k2, others on request		
Nominal output (max.)	250 mW		
Total resistance			
For sensor with max. 12 m and cable with max. 20 m	1k2 ±10%, 8k2 ±3%		
When sensor is actuated	Test piece (cylinder) Ø 80 mm, F = 150 N		
Contact transition resistance	< 400 ohms		
Switching current (min. / max.)	DC 1 mA / DC 10 mA		
More than one sensor	Max. 5 in series		
Connection cable	1004733		

Physical resistance
See page 8
Chemical resistance
See page 9
Compatibility of materials
See page 9

* Shorter test specimens have different actuation forces.

7501755 EKS 026 TPE

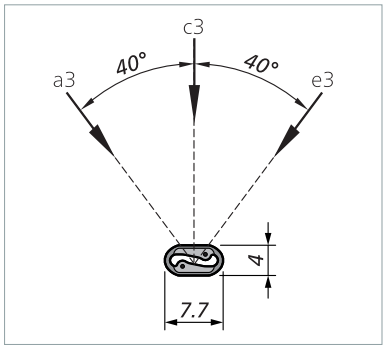

Dimensional tolerances according to ISO 3302 E2/L2

Bend radii:

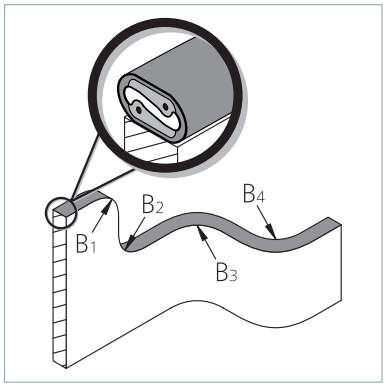

Switching characteristics at v_{test} = 50 mm/min			
Actuation force (c3)	**+23 °C**	**–25 °C**	**–40 °C**
Test piece (rod) Ø 20 mm	< 10 N	< 15 N	< 20 N
Test piece (cylinder) Ø 80 mm	< 50 N	< 90 N	< 100 N
Test specimen length *	1 m		
Actuation distance (c3)			
Test piece (cylinder) Ø 80 mm	< 1.5 mm		
Actuation angle (a3 to e3)			
Test piece (cylinder) Ø 80 mm	±40°		
Safety classifications			
ISO 13849-1: B_{10D}	2×10^6		
Mechanical operating conditions			
Sensor length (min./max.)	100 mm / 150 m		
Cable length (min./max.)	200 mm / 100 m		
Tensile load, cable (max.)	20 N		
Bend radii, minimum			
B_1 / B_2 / B_3 / B_4	80 / 50 / 120 / 120 mm		
IEC 60529: degree of protection	IP67		
EN 50125-1:			
Air temperature class	TX		
Class of altitude range	AX, max. 2000 m NHN		
Max. humidity at	100%		
Max. temperature change	3 K/s		
Operating temperature	–40 bis +80 °C		
Short-term (max. 10 min)	–40 to +100 °C		
Weight (without cable)	23 g/m		
Electrical operating conditions			
When sensor is not actuated			
Terminal resistance (±1%)	1k2, 8k2, others on request		
Nominal output (max.)	250 mW		
Total resistance			
For sensor with max. 12 m and cable with max. 20 m	1k2 ±10%, 8k2 ±3%		
When sensor is actuated	Test piece (cylinder) Ø 80 mm, F = 150 N		
Contact transition resistance	< 400 ohms		
Switching current (min. / max.)	DC 1 mA / DC 10 mA		
More than one sensor	Max. 5 in series		
Connection cable	1004681		

Physical resistance
See page 8
Chemical resistance
See page 9
Compatibility of materials
See page 9

* Shorter test specimens have different actuation forces.

7501869 EKS 030 TPE

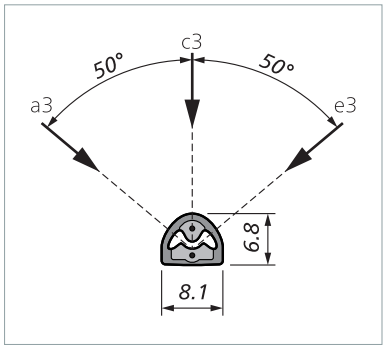

Dimensional tolerances according to ISO 3302 E2/L2

Bend radii:

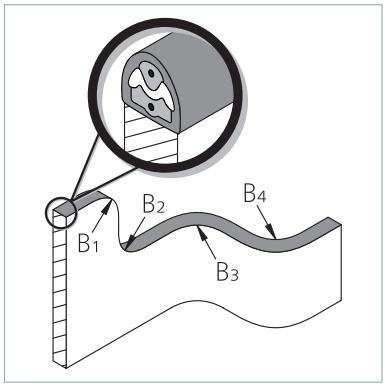

Switching characteristics at v_{test} = 50 mm/min			
Actuation force (c3)	**+23 °C**	**–25 °C**	**–40 °C**
Test piece (rod) Ø 20 mm	< 15 N	< 25 N	< 30 N
Test piece (cylinder) Ø 80 mm	< 80 N	< 120 N	< 140 N
Test specimen length *	1 m		
Actuation distance (c3)			
Test piece (cylinder) Ø 80 mm	< 2.0 mm		
Actuation angle (a3 to e3)			
Test piece (cylinder) Ø 80 mm	±50°		
Safety classifications			
ISO 13849-1: B_{10D}	2×10^6		
Mechanical operating conditions			
Sensor length (min./max.)	100 mm / 150 m		
Cable length (min./max.)	200 mm / 100 m		
Tensile load, cable (max.)	40 N		
Bend radii, minimum			
B_1 / B_2 / B_3 / B_4	70 / 60 / 30 / 30 mm		
IEC 60529: degree of protection	IP67		
EN 50125-1:			
Air temperature class	TX		
Class of altitude range	AX, max. 2000 m NHN		
Max. humidity at	100%		
Max. temperature change	3 K/s		
Operating temperature	–40 to +80 °C		
Short-term (max. 10 min)	–40 to +100 °C		
Weight (without cable)	40 g/m		
Electrical operating conditions			
When sensor is not actuated			
Terminal resistance (±1%)	1k2, 8k2, others on request		
Nominal output (max.)	250 mW		
Total resistance			
For sensor with max. 12 m and cable with max. 20 m	1k2 ±10%, 8k2 ±3%		
When sensor is actuated	Test piece (cylinder) Ø 80 mm, F = 150 N		
Contact transition resistance	< 400 ohms		
Switching current (min. / max.)	DC 1 mA / DC 10 mA		
More than one sensor	Max. 5 in series		
Connection cable	1004733		

Physical resistance
See page 8
Chemical resistance
See page 9
Compatibility of materials
See page 9

* Shorter test specimens have different actuation forces.

7500674 SE 1 15 TPE

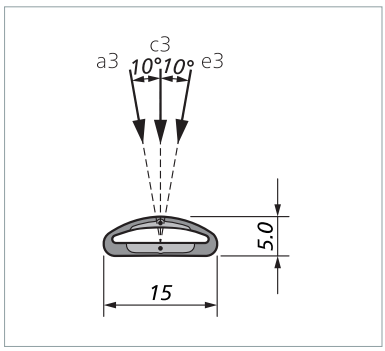

Dimensional tolerances according to ISO 3302 E2/L2

Bend radii:
SE 1 15 TPE in GP 22-1 NBR

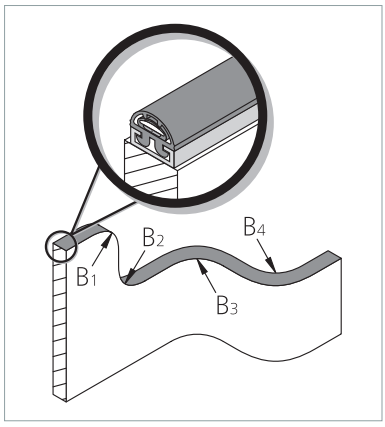

With pull-in tab:

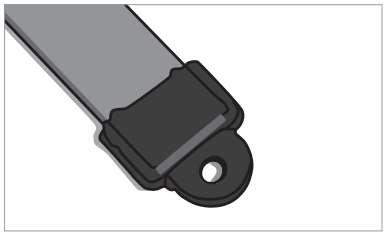

Switching characteristics at v_{test} = 50 mm/min			
Actuation force (c3)	**+23 °C**	**–25 °C**	**–40 °C**
Test piece (rod) Ø 20 mm	< 10 N	< 25 N	< 30 N
Test piece (cylinder) Ø 80 mm	< 35 N	< 90 N	< 100 N
Test specimen length *	1 m		
Actuation distance (c3)			
Test piece (cylinder) Ø 80 mm	< 3.0 mm		
Actuation angle (a3 to e3)			
Test piece (cylinder) Ø 80 mm	±10°		
Safety classifications			
ISO 13849-1: B_{10D}	2×10^6		
Mechanical operating conditions			
Sensor length (min./max.)	100 mm / 50 m		
Cable length (min./max.)	200 mm / 100 m		
Tensile load (max.)			
Cable	50 N		
Pull-in tab	30 N		
Bend radii, minimum			
B_1 / B_2 / B_3 / B_4	300 / 350 / 300 / 300 mm		
Tested in rubber profile	GP 22-1 NBR		
IEC 60529: degree of protection	IP67		
EN 50125-1:			
Air temperature class	TX		
Class of altitude range	AX, max. 2000 m NHN		
Max. humidity at	100%		
Max. temperature change	3 K/s		
Operating temperature	–40 to +80 °C		
Short-term (max. 10 min)	–40 to +100 °C		
Weight (without cable)	42 g/m		
Electrical operating conditions			
When sensor is not actuated			
Terminal resistance (±1%)	1k2, 8k2, others on request		
Nominal output (max.)	250 mW		
Total resistance			
For sensor with max. 12 m and cable with max. 20 m	1k2 ±10%, 8k2 ±3%		
When sensor is actuated	Test piece (cylinder) Ø 80 mm, F = 150 N		
Contact transition resistance	< 400 ohms		
Switching current (min. / max.)	DC 1 mA / DC 10 mA		
More than one sensor	Max. 5 in series		
Connection cable	1004733		

* Shorter test specimens have different actuation forces.

Physical resistance
See page 8
Chemical resistance
See page 9
Compatibility of materials
See page 9

7500270 SE 1 18 TPE

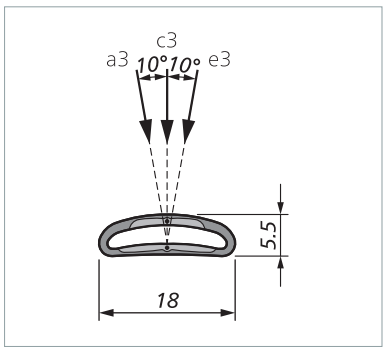

Dimensional tolerances according to ISO 3302 E2/L2

Bend radii:
SE 1 18 TPE in GP 22-1 NBR

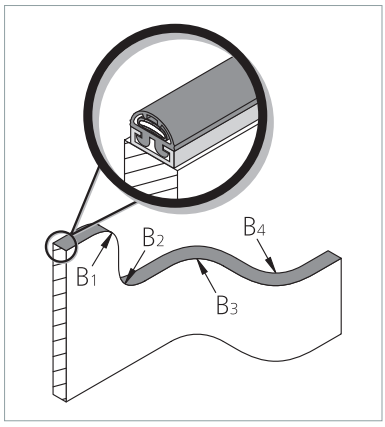

Without pull-in tab:

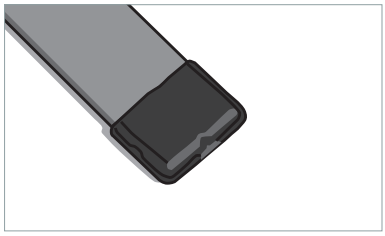

Switching characteristics at v_{test} = 50 mm/min			
Actuation force (c3)	**+23 °C**	**–25 °C**	**–40 °C**
Test piece (rod) Ø 20 mm	< 15 N	< 30 N	< 35 N
Test piece (cylinder) Ø 80 mm	< 55 N	< 100 N	< 120 N
Test specimen length *	1 m		
Actuation distance (c3)			
Test piece (cylinder) Ø 80 mm	< 3.0 mm		
Actuation angle (a3 to e3)			
Test piece (cylinder) Ø 80 mm	±10°		
Safety classifications			
ISO 13849-1: B_{10D}	2×10^6		
Mechanical operating conditions			
Sensor length (min./max.)	100 mm / 50 m		
Cable length (min./max.)	200 mm / 100 m		
Tensile load (max.)			
Cable	50 N		
Pull-in tab (optional)	30 N		
Bend radii, minimum			
B_1 / B_2 / B_3 / B_4	300 / 350 / 300 / 300 mm		
Tested in rubber profile	GP 22-1 NBR		
IEC 60529: degree of protection	IP67		
EN 50125-1:			
Air temperature class	TX		
Class of altitude range	AX, max. 2000 m NHN		
Max. humidity at	100%		
Max. temperature change	3 K/s		
Operating temperature	–40 to +80 °C		
Short-term (max. 10 min)	–40 to +100 °C		
Weight (without cable)	52 g/m		
Electrical operating conditions			
When sensor is not actuated			
Terminal resistance (±1%)	1k2, 8k2, others on request		
Nominal output (max.)	250 mW		
Total resistance			
For sensor with max. 12 m and cable with max. 20 m	1k2 ±10%, 8k2 ±3%		
When sensor is actuated	Test piece (cylinder) Ø 80 mm, F = 150 N		
Contact transition resistance	< 400 ohms		
Switching current (min. / max.)	DC 1 mA / DC 10 mA		
More than one sensor	Max. 5 in series		
Connection cable	1004733		

Physical resistance
See page 8
Chemical resistance
See page 9
Compatibility of materials
See page 9

* Shorter test specimens have different actuation forces.

Options for SE 1 18 TPE

With pull-in tab:

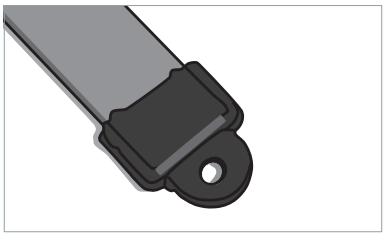

With snap hook:

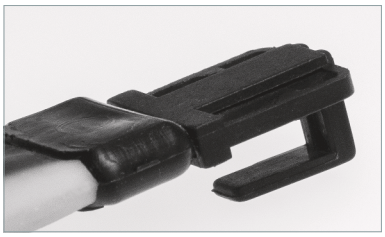

Physical resistance

	TPE
VW PV 3930: weathering	
2800 h “Florida”	
EKS ... TPE	No cracks
SE ... TPE	–

Chemical resistance

The product is resistant to normal chemical influences over an exposure time of 24 hours.

Explanation of symbols:
+ = resistant
± = resistant to a certain extent
– = not resistant

	TPE
Cyanoacrylate adhesive	+
Cyclohexylamine	–
Dicyclohexylcarbodiimide	–
Dithiocarbonate	–
Greases	±
Graffiti remover	±
Urea derivatives	–
Skin cream	±
Isopropanol	±
Neutral cleaner	+
Alkaline cleaner	+
Hydrochloric acid cleaner	+
Phosphoric acid cleaner	+
Plastic cleaner	+
Soap solution	+
Saline solution 5%	+
Spirit (ethyl alcohol)	±
Talc	+

All tests were carried out at room temperature (+23 °C).

Compatibility of materials

The suitability of the product as part of the complete system (particularly the degree to which the materials are compatible with the components used) must be assessed in the context of the specific application. This is the responsibility of the company integrating the product into the system.
Depending on the exact nature of your requirements, we will be happy to assist you with alternative methods for testing the compatibility of materials (pressure-sensitive sensor + rubber sleeve profile used) by drawing on our expertise.

Cables

1004681 Single-core wire 1× 0.35 mm²

Labelling: LEONI

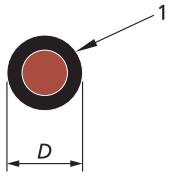

Cable structure	
Conductor, No. 1	CU wire, plain, wire EN 13602 – Cu-ETP1
Nominal cross-section	0.35 mm²
Insulation No. 1	Black, TPS
Outer diameter D	1.4 ±0.1 mm
Weight	5 g/m
Electrical operating conditions	
Conductor resistance at 20 °C	≤ 52 ohms/km
Operating voltage (max.)	–
Test voltage	–
Mechanical operating conditions	
Bend radii (min.)	
Single	7 mm (5× D)
Multiple (< 100×)	21 mm (15× D)
Drag chain R 10	
Cycles: min. 1× 10⁶	–
Operating temperature (3,000 h)	–40 to +125 °C
Physical resistance	
UN/ECE R118 Section 6.2.6:	
Flame propagation	Passed
2011/65/EU: RoHS	–
Chemical resistance	
ISO 4892-2: UV resistance (500 h)	Passed
ISO 6722-1: ozone resistance	
100 pphm, 65 °C, 192 h	Passed
ISO 6722-1: media resistance	
Test method 2	Passed

	EKS … TPE			SE … TPE	
for	**002**	**026**	**030**	**1 15**	**1 18**
suitable		●			

MAYSER®

1004733 Multi-core cable 2× 0.22 mm²

Labelling: MAYSER GmbH & Co.KG 1004733 2x0.22 mm²

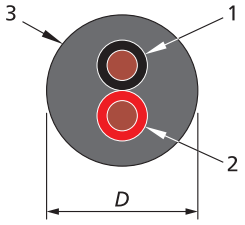

Cable structure	
Conductors, Nos. 1 and 2	CU wire, tinned, wire EN 13602 – Cu-ETP1
Nominal cross-section	0.22 mm²
Insulation No. 1	Black, PVC
No. 2	Red, PVC
Sheath No. 3	Black, TPS
Outer diameter D	3.7 ±0.15 mm
Weight	15 g/m
Electrical operating conditions	
Conductor resistance at 20 °C	≤ 87 ohms/km
Operating voltage (max.)	DC 60 V
Test voltage	–
Mechanical operating conditions	
Bend radii (min.)	
Single	19 mm (5× D)
Multiple	56 mm (15× D)
Drag chain R 10	
Cycles: min. 1× 10^6	–
Operating temperature (3,000 h)	–40 to +90 °C
Physical resistance	
UN/ECE R118 Section 6.2.6:	
Flame propagation	–
2011/65/EU: RoHS	Complies
Chemical resistance	
ISO 4892-2: UV resistance (500 h)	–
ISO 6722-1: ozone resistance	
100 pphm, 65 °C, 192 h	–
ISO 6722-1: media resistance	
Test method 2	–

	EKS … TPE			SE … TPE	
for	**002**	**026**	**030**	**1 15**	**1 18**
suitable	●		●	●	●

MAYSER®

1004821 Multi-core cable 2× 0.35 mm²

EPDM

Labelling: MAYSER RailFR 1004821 DIN EN 45545-2 2x0,35 QMM

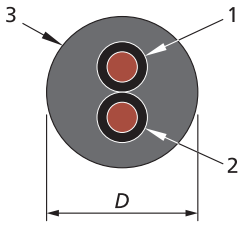

Cable structure	
Conductors, Nos. 1 and 2	CU wire, tinned, wire EN 13602 – Cu-ETP1
Nominal cross-section	0.35 mm²
Insulation No. 1	Black, EPDM
No. 2	Black, EPDM
Sheath No. 3	Black, EPDM
Outer diameter D	4.4 ±0.2 mm
Weight	32 g/m
Electrical operating conditions	
Conductor resistance at 20 °C	≤ 58 ohms/km
Operating voltage (max.)	–
Test voltage	2 kV
Mechanical operating conditions	
Bend radii (min.)	
Fixed installation	–
Moving / free installation	–
Drag chain R 10	
Cycles: min. 1× 10⁶	–
Operating temperature (3,000 h)	–40 to +120 °C
Physical resistance	
UN/ECE R118 Section 6.2.6:	
Flame propagation	–
2011/65/EU: RoHS	Complies
Chemical resistance	
ISO 4892-2: UV resistance (500 h)	–
ISO 6722-1: ozone resistance	
100 pphm, 65 °C, 192 h	–
ISO 6722-1: media resistance	
Test method 2	–

	EKS … TPE			SE … TPE	
for	**002**	**026**	**030**	**1 15**	**1 18**
suitable	●		●	●	●

MAYSER®

1005052 Multi-core cable 2× 0.35 mm²

TPV

Labelling: MAYSER 1005052 2x0.35 mm²

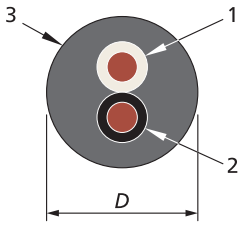

Cable structure	
Conductors, Nos. 1 and 2	CU wire, plain, wire EN 13602 – Cu-ETP1
Nominal cross-section	0.35 mm²
Insulation No. 1	White, PVC
No. 2	Black, PVC
Sheath No. 3	Black, TPV
Outer diameter D	4.15 ±0.1 mm
Weight	20 g/m
Electrical operating conditions	
Conductor resistance at 20 °C	≤ 52 ohms/km
Operating voltage (max.)	DC 60 V
Test voltage	–
Mechanical operating conditions	
Bend radii (min.)	
Single	21 mm (5× D)
Multiple (< 100×)	63 mm (15× D)
Drag chain R 10	
Cycles: min. 1× 10⁶	–
Operating temperature (3,000 h)	–40 to +90 °C
Physical resistance	
UN/ECE R118 Section 6.2.6:	
Flame propagation	–
2011/65/EU: RoHS	Complies
Chemical resistance	
ISO 4892-2: UV resistance (500 h)	–
ISO 6722-1: ozone resistance	
100 pphm, 65 °C, 192 h	–
ISO 6722-1: media resistance	
Test method 2	–

	EKS … TPE			SE … TPE	
for	**002**	**026**	**030**	**1 15**	**1 18**
suitable	●		●	●	●

1005437 Multi-core cable 2× 0.35 mm²

TPV

Labelling: MAYSER 2x0.35 mm² Foil 1005437

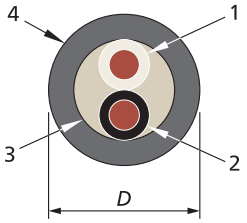

Cable structure	
Conductors, Nos. 1 and 2	CU wire, plain, wire EN 13602 – Cu-ETP1
Nominal cross-section	0.35 mm²
Insulation No. 1	White, TPS
No. 2	Black, TPS
Shielding No. 3	Natural, PP
Sheath No. 4	Black, TPV
Outer diameter D	4.2 ±0.15 mm
Weight	20 g/m
Electrical operating conditions	
Conductor resistance at 20 °C	≤ 52 ohms/km
Operating voltage (max.)	DC 60 V
Test voltage	–
Mechanical operating conditions	
Bend radii (min.)	
Single	21 mm (5× D)
Multiple	63 mm (15× D)
Drag chain R 10	
Cycles: min. 1× 10⁶	–
Operating temperature (3,000 h)	–40 to +90 °C
Physical resistance	
UN/ECE R118 Section 6.2.6:	
Flame propagation	–
2011/65/EU: RoHS	–
Chemical resistance	
ISO 4892-2: UV resistance (500 h)	–
ISO 6722-1: ozone resistance	
100 pphm, 65 °C, 192 h	–
ISO 6722-1: media resistance	
Test method 2	–

	EKS … TPE			SE … TPE	
for	**002**	**026**	**030**	**1 15**	**1 18**
suitable		●			

MAYSER®

1006491 Mayser RoadFR® 2× 0.35 mm²

Labelling: URus AWM Style 21439 300V 105°C FT2 Mayser RoadFR 1006491 ECE R118 2x0,35 mm²

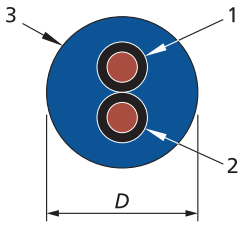

Cable structure	
Conductors, Nos. 1 and 2	CU wire, plain, wire EN 13602 – Cu-ETP1
Nominal cross-section	0.35 mm²
Insulation No. 1	Black, PVC
No. 2	Black, PVC
Sheath No. 3	Signal blue (RAL 5005), TPS
Outer diameter D	4.1 ±0.2 mm
Weight	22 g/m
Electrical operating conditions	
Conductor resistance at 20 °C	≤ 52 ohms/km
Operating voltage (max.)	DC 60 V
Test voltage	–
Mechanical operating conditions	
Bend radii (min.)	
Fixed installation	25 mm (6× D)
Moving / free installation	33 mm (8× D)
Drag chain R 10	
Cycles: min. 1× 10^6	–
Operating temperature (3,000 h)	–40 to +105 °C
Physical resistance	
UN/ECE R118 Section 6.2.6:	
Flame propagation	Passed
2011/65/EU: RoHS	Complies
Chemical resistance	
ISO 4892-2: UV resistance (500 h)	Passed
ISO 6722-1: ozone resistance	
100 pphm, 65 °C, 192 h	Passed
ISO 6722-1: media resistance	
Test method 2	Passed

	EKS … TPE			SE … TPE	
for	**002**	**026**	**030**	**1 15**	**1 18**
suitable	●		●	●	●

MAYSER®

1007144 Mayser RoadFR® 2× 0.22 mm²

Labelling: cURus AWM Style 21439 300V 105°C FT2 I/II A/B Mayser RoadFR 1007144 ECE R118 2x0,22 mm²

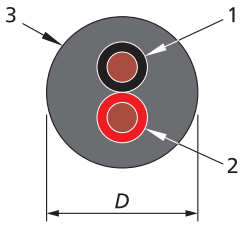

Cable structure	
Conductors, Nos. 1 and 2	CU wire, tinned, wire EN 13602 – Cu-ETP1
Nominal cross-section	0.22 mm²
Insulation No. 1	Black, PVC
No. 2	Red, PVC
Sheath No. 3	Black, TPS
Outer diameter D	3.7 ±0.1 mm
Weight	15 g/m
Electrical operating conditions	
Conductor resistance at 20 °C	≤ 87 ohms/km
Operating voltage (max.)	DC 60 V
Test voltage	–
Mechanical operating conditions	
Bend radii (min.)	
Fixed installation	19 mm (5× D)
Moving / free installation	30 mm (8× D)
Drag chain R 10	
Cycles: min. 1× 10⁶	–
Operating temperature (3,000 h)	–40 to +105 °C
Physical resistance	
UN/ECE R118 Section 6.2.6:	
Flame propagation	Passed
2011/65/EU: RoHS	Complies
Chemical resistance	
ISO 4892-2: UV resistance (500 h)	Passed
ISO 6722-1: ozone resistance	
100 pphm, 65 °C, 192 h	Passed
ISO 6722-1: media resistance	
Test method 2	Passed

	EKS … TPE			SE … TPE	
for	**002**	**026**	**030**	**1 15**	**1 18**
suitable	●		●	●	●

Drag chain cables

1003288 Chainflex CF900 2× 0.25 mm²

Labelling: igus chainflex CF900.14.442 2x0,25mm² 300/500V CE M/Y/WW RoHs-II conform Mayser GmbH&Co.KG 1003288

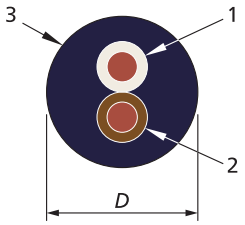

Cable structure	
Conductors, Nos. 1 and 2	CU wire, tinned, wire EN 13602 – Cu-ETP1
Nominal cross-section	0.25 mm²
Insulation No. 1	White, TPE
No. 2	Brown, TPE
Sheath No. 3	Steel blue (RAL 5011), TPE
Outer diameter D	4.0 ±0.2 mm
Weight	18 g/m
Electrical operating conditions	
Conductor resistance at 20 °C	≤ 78 ohms/km
Operating voltage (max.)	DC 60 V
Test voltage	–
Mechanical operating conditions	
Bend radii (min.)	
Fixed installation	28 mm (6.8× D)
Moving / free installation	–
Drag chain	
Cycles: min. 1× 10⁶	28 mm (6.8× D)
Operating temperature (3000 h)	–40 to +105 °C
Physical resistance	
UN/ECE R118 Section 6.2.6:	
Flame propagation	–
2011/65/EU: RoHS	Complies
Chemical resistance	
ISO 4892-2: UV resistance (500 h)	Passed
ISO 6722-1: ozone resistance	
100 pphm, 65 °C, 192 h	Passed
ISO 6722-1: media resistance	
Test method 2	Passed

	EKS ... TPE			SE ... TPE	
for	**002**	**026**	**030**	**1 15**	**1 18**
suitable	●		●	●	●

1005975 Mayser RailFR® 2× 0.25 mm²

Labelling: MAYSER RailFR 1005975 2x0,25 mm²

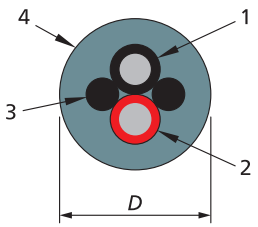

Cable structure	
Conductors, Nos. 1 and 2	CU wire, tinned, wire EN 13602 – Cu-ETP1
Nominal cross-section	0.25 mm²
Insulation No. 1	Black, TPE
No. 2	Red, TPE
Dummy wire No. 3	Black, TPE
Sheath No. 4	Squirrel grey (RAL 7000), TPE
Outer diameter D	3.8 ±0.2 mm
Weight	22 g/m
Electrical operating conditions	
Conductor resistance at 20 °C	≤ 80 ohms/km
Operating voltage (max.)	DC 48 V
Test voltage	1.5 kV
Mechanical operating conditions	
Bend radii (min.)	
Fixed installation	19 mm (5× D)
Moving / free installation	39 mm (10× D)
Drag chain R 40	
Cycles: min. 1× 10⁶	41 mm (10.5× D)
Operating temperature (3,000 h)	–40 to +90 °C
Physical resistance	
EN 45545-2: suitable for	
Hazard level	HL3
Set of requirements	R15 and R16
HD 605: artificial weathering	
60 W/m², 720 h, 38 °C, 65% rel. humidity, cycle: 18/102 min	No cracks
IEC 60754-1	Halogen-free
2011/65/EU: RoHS	Complies
Chemical resistance	
Hydrolysis	Very good
Acids	Good
EN 50264-1 (EM 104):	
Oil	Very good
Fuels	Very good
EN 50396 paragraph 8.1.3:	
Ozone resistance 72 h, 40 °C, 55% rel. humidity	No cracks

	EKS … TPE			SE … TPE	
for	**002**	**026**	**030**	**1 15**	**1 18**
suitable	●		●	●	●

MAYSER®

1006180 Mayser RoadFR® 2× 0.25 mm²

Labelling: igus chainflex CF900.15.293 CE M +++ Mayser RoadFR 2x0,25 mm²

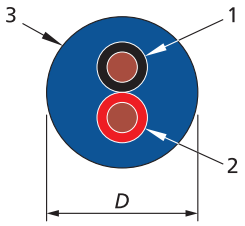

Cable structure	
Conductors, Nos. 1 and 2	CU wire, wire EN 13602 – Cu-ETP1
Nominal cross-section	0.25 mm²
Insulation No. 1	Black, TPS
No. 2	Red, TPS
Sheath No. 3	Signal blue (RAL 5005), TPV
Outer diameter D	3.7 ±0.1 mm
Weight	20 g/m
Electrical operating conditions	
Conductor resistance at 20 °C	≤ 78 ohms/km
Operating voltage (max.)	DC 60 V
Test voltage	2 kV
Mechanical operating conditions	
Bend radii (min.)	
Fixed installation	23 mm (6× D)
Moving / free installation	30 mm (8× D)
Drag chain R 10	
Cycles: min. 1× 10⁶	48 mm (12.5× D)
Operating temperature (3,000 h)	–40 to +90 °C
Physical resistance	
UN/ECE R118 Section 6.2.6:	
Flame propagation	Passed
2011/65/EU: RoHS	Complies
Chemical resistance	
ISO 4892-2: UV resistance (500 h)	Passed
ISO 6722-1: ozone resistance	
100 pphm, 65 °C, 192 h	Passed
ISO 6722-1: media resistance	
Test method 2	Passed

	EKS … TPE			SE … TPE	
for	**002**	**026**	**030**	**1 15**	**1 18**
suitable	●		●	●	●